SIT 210 TASK 4.1P

1. GitHub Repository link
2. Circuit Diagram

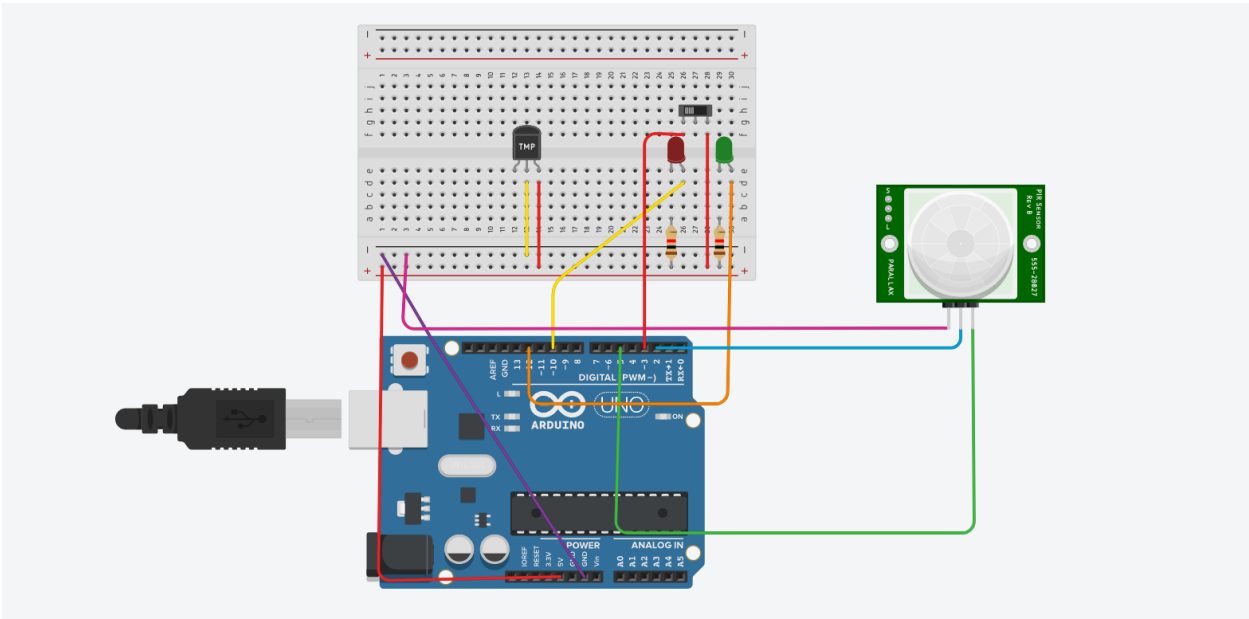

3. Screenshot & Images

```
#include <Wire.h>
#include <BH1750.h>


const int LED1_PIN = 10;
const int LED2_PIN = 12;
const int PIR_PIN  = 2;
const int SW_PIN   = 3;


// Light threshold
// Lower lux = darker
// Adjust this after testing in your room
const float DARK_THRESHOLD = 30.0;

BH1750 lightMeter;

volatile bool pirTriggered = false;
volatile bool switchTriggered = false;

bool lightsOn = false;
bool manualMode = false;   // true when slider switch is used
unsigned long lastLuxRead = 0;
float currentLux = 0.0;

void pirISR() {
  pirTriggered = true;
}

void switchISR() {
```

Output Serial Monitor ×

Message (Enter to send message to 'Arduino NANO 33 IoT' on 'COM3')

```
Manual override ON. LED1 and LED2 turned ON.
Slider switch interrupt received.
Manual override OFF. LED1 and LED2 turned OFF.
Slider switch interrupt received.
Manual override ON. LED1 and LED2 turned ON.
Slider switch interrupt received.
Manual override OFF. LED1 and LED2 turned OFF.
Slider switch interrupt received.
Manual override ON. LED1 and LED2 turned ON.
Slider switch interrupt received.
Manual override ON. LED1 and LED2 turned ON.
Slider switch interrupt received.
Manual override ON. LED1 and LED2 turned ON.
Slider switch interrupt received.
Manual override ON. LED1 and LED2 turned ON.
```

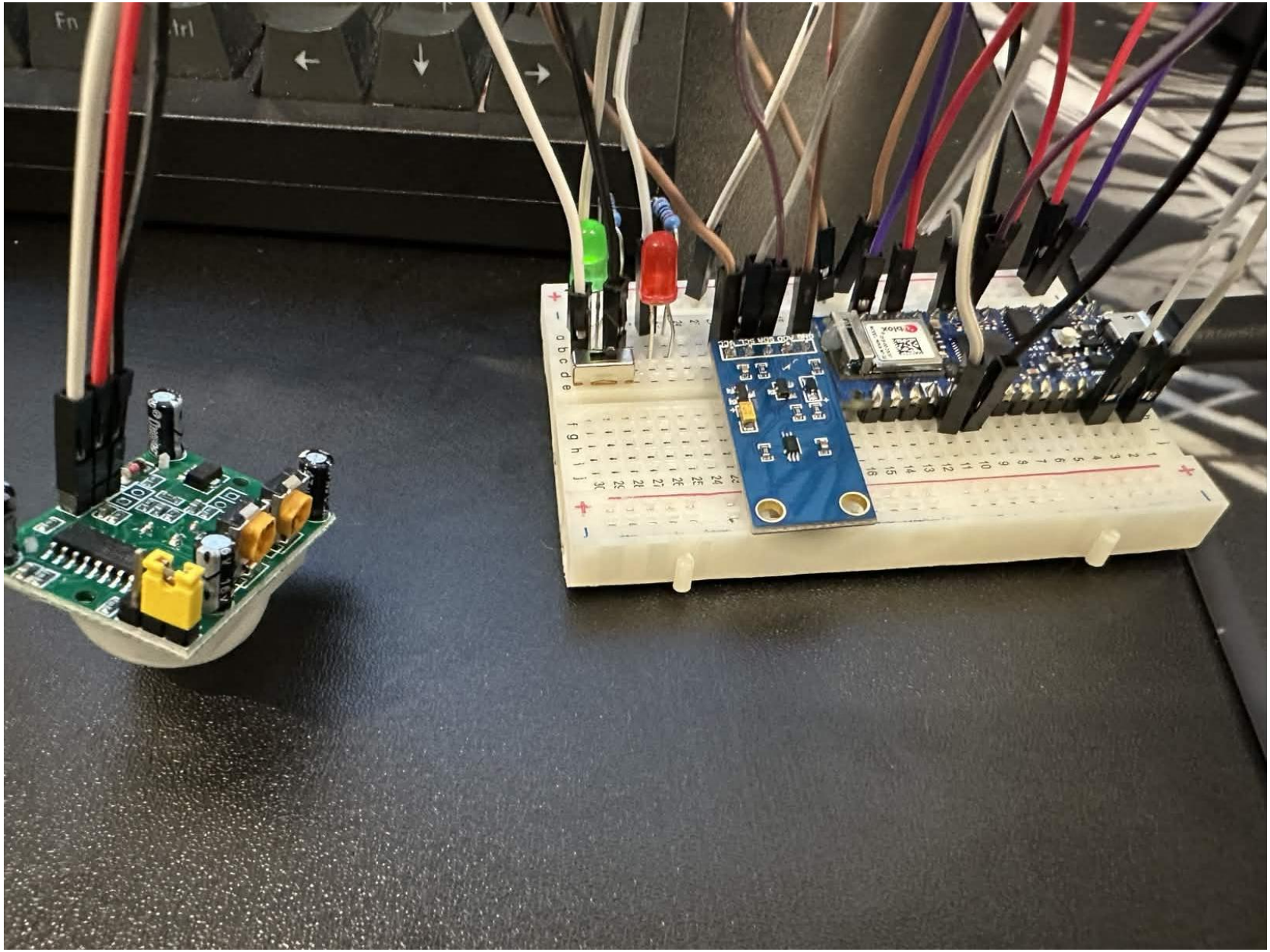

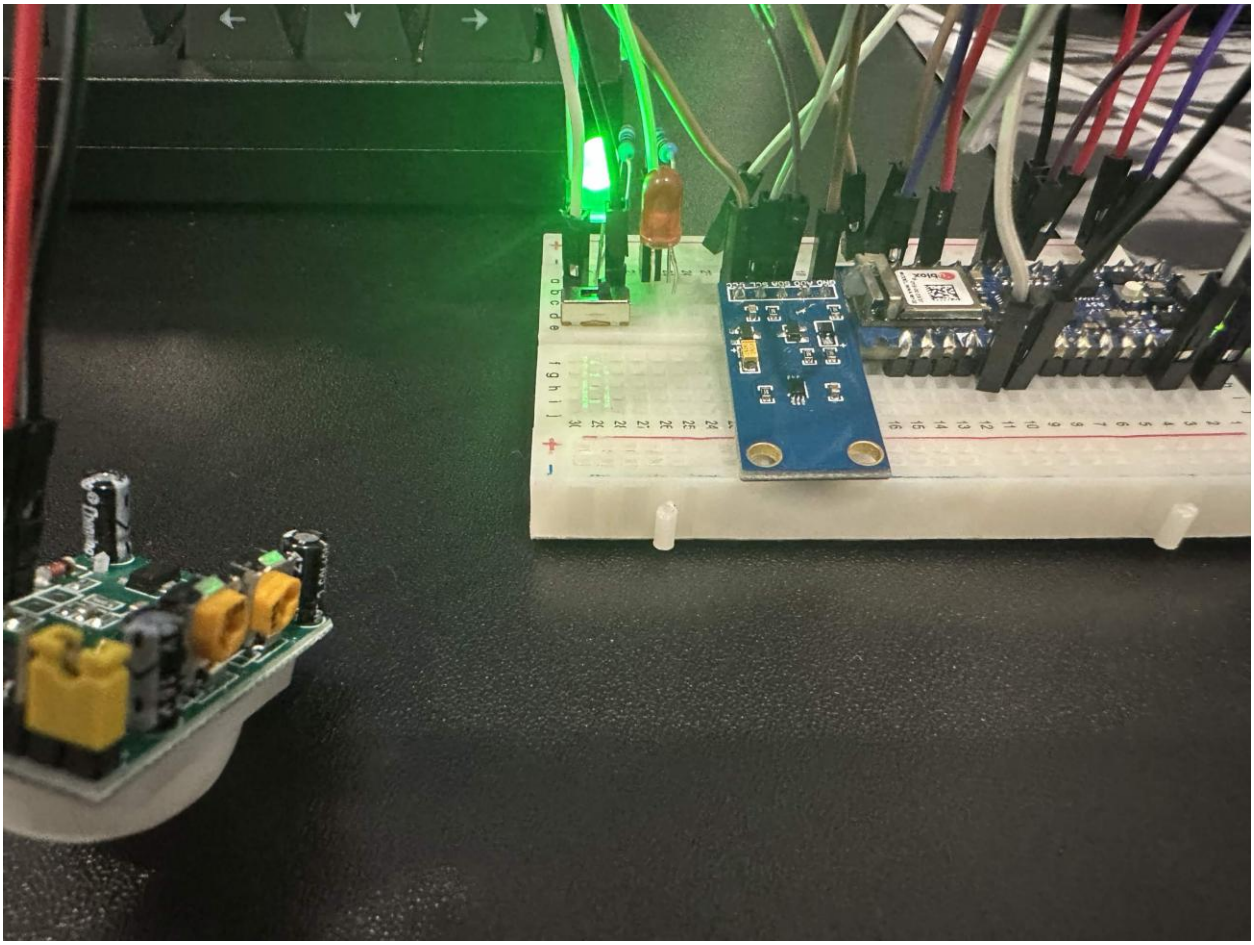

4. Explanation

External interruption in the Arduino Nano 33 IoT has been implemented to make the system responsive. Both PIR motion detectors and slider switch are attached to digital pins using the attachInterrupt() method. As soon as any kind of interruption is triggered due to movement detection and switch operation, there will be no need for Arduino to keep polling the input pins. The BH1750 sensor helps to detect ambient light intensity. In case there is motion in a dark environment, the system turns on LEDs (LED1 and LED2). However, if there is no motion but only darkness, the user can turn on the lights manually by using the slider switch.

Interruption is an effective technique that helps the system react immediately to critical occurrences. The microcontroller does not need to continually check for occurrences such as PIR sensing and switching operations since it will only be interrupted when the event occurs.